OLEDWorks Lumiblade OLED Panel Brite 3 FL200R nw

Neutral white – 4000K

Third time truly functional OLED-light

When it comes to lighting OLEDs inspire on a whole different level. There is the unique quality of the light itself. In combination with other characteristics e.g. the razor-thin shape and the instant glare-free light when switched on, OLEDs can be used to realize innovative applications and designs.

With its 3rd generation of the OLED panel Brite FL300 OLEDWorks brings OLED lighting again further into functional lighting applications, by featuring a more efficient and more beautiful OLED lighting experience. With the luminous flux of up to 165 lumens the Brite 3 FL200R products are still the brightest neutral white OLED panel commercially available worldwide.

The Brite 3 FL200R products are available at three integration levels making it the ideal building block for every OLED lighting application to be used in the area of functional lighting. These new FL200 OLED panels are belonging to the already third family of bright OLEDs and now in the round shape as well which will make it even more easy to bring functional OLED lighting to places or products that require beautiful and functional lighting at the same time.

The new advantages:

Efficient: Efficacy of more than 60 lm/W
Beautiful: CRI of >90 and R9 >75
Different: Available now as well in round
➔ introducing the FL200R – **R**ound shape with up to **200** lumen for **F**unctional **L**ighting applications

The well-known advantages:

Brightest neutral white OLED panel commercially available with up to 165 lumens.
Thin Film Encapsulation for ultimate reliability.
Neutral white color temperature - 4,000K
Low thickness of 1.4 to 2.1 mm
Ideal for applications in functional general lighting systems.
All the known advantages of OLED technology: – thin – homogenous – instant glare free

OLEDWorks
Naturally Illuminating

Description

The OLED Panel Brite 3 FL200R nw is a flat light source. Focusing on general lighting applications, OLEDWorks OLED Lighting is developing products with a high lumen output at low costs. One significant step in this direction is the range extension of the OLEDWorks OLED Panel Brite 3 FL200R nw which are available at three different integration levels.

Introduction

OLED is a large-area diffuse light source. Unlike incandescent bulbs, which generate light by passing electricity through a wire, or fluorescent lamps, which pass current through a gas, OLED lighting works by passing electricity through one or more extremely thin layers of organic semiconductor material. These layers are sandwiched between one positively and one negatively charged electrode. The 'sandwich' is placed on a sheet of glass or other transparent material known as the substrate. The OLED is protected by a thin-film encapsulation and a flat heat spreader on the rear side. When current is applied to the electrodes, they inject positively and negatively charged holes and electrons. These recombine in the organic layer of the sandwich and create a brief, high-energy state called 'exciton'. As this layer returns to its original stable, non-excited state, the energy flows evenly through the organic film causing it to emit light.

In contrast to virtually all previous OLED products the OLED Panel family Brite 3 FL200R is a product that for the first time attains the status of a general lighting application. As part of its ongoing product improvement, OLEDWorks will continue to develop the OLED Panel family Brite FL200R to higher levels of performance in different shapes and sizes, like now with the Brite 3 range extension.

This document refers to

Product	Integration Level	Product Code
OLED Panel Brite 3 FL200R nw Level 1	1	LPB3200C1NWL101
OLED Panel Brite 3 FL200R nw Level 1.5	1.5	LPB3200C1NWL105
OLED Panel Brite 3 FL200R nw Level 2	2	LPB3200C1NWL201

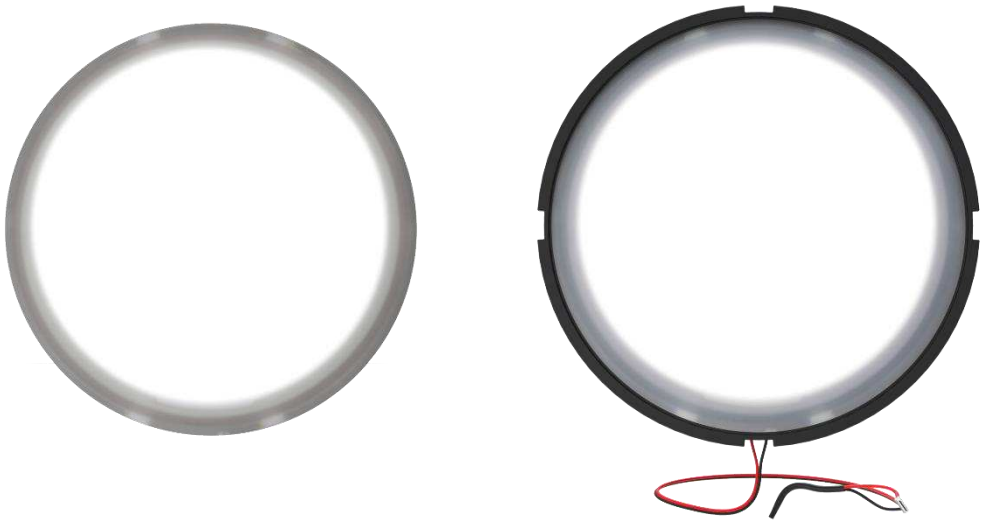

Standard compliance and sustainability

OLEDWorks products are environmentally friendly and provide efficient illumination without the use of hazardous materials.

This product is RoHS (EU Directive 2011/65/EU) and IEC 62868 (OLED safety) and IEC 62922 (OLED performance) compliant.

CE

This product is compliant with UL8752 (OLED safety). This product is UL recognized in file E353273.

c UL us

Within the UL report certain 'Conditions of Acceptability' are mentioned as follows. When installed in the end product, the following shall be taken into consideration:

1. These products have been evaluated for connection to an isolated DC Class 2 constant current power source.
   Caution: Do not operate the OLED panel with other than UL-Class 2 power supplies.
2. This product has been evaluated for use in dry or damp locations.
3. The OLED panel temperature shall not exceed 80 °C.
4. Input leads to the OLEDs are intended for factory installation only. Strain relief to be considered in the end-use application if leads are subjected to mechanical stress.
5. Input leads to the OLED panels shall be sufficiently separated from higher voltage conductors in the end-product in compliance with end-product requirements.

System

	Description	Remark
Indoor / outdoor	Indoor buildings	location with insignificant shock and vibration
Ingress protection		not applicable for OLED components
Classification	Applicable in applications with Class III (IEC) and Class II (UL) protection	Application standard IEC61140
OLED color	White	
Carrier material	Glass	
Cable	AWG 26	Brite 3 FL200R nw Level 2
Connector	5-pin Molex Picoblade 510210500	
RoHS conform	Yes	2011/65/EU

Operational environmental conditions*

Specification item	Value	Unit	Condition
Ambient temperature	+5 … +40	°C	
Relative humidity	20 … 80	%rH	no dew, no water spray, a maximum %rH of 60 is recommended.
Recommended internal operation temperature (OLED organic temperature)	≤ 35	°C	local temperature
Maximum internal operation temperature (OLED organic temperature)	≤ 80	°C	local temperature, for T > 40 °C lifetime will be reduced.

* please refer to Thermal Characteristics on page 20 for more information.

The Brite 3 FL200R nw is designed for indoor use only. Do not expose to water or excessive moisture.

Storage conditions*[1]

Specification item	Value	Unit	Condition
Ambient temperature	-40 … +60	°C	
Relative humidity	5 … 85	%rH	no dew, no water spray

*[1] Recommended storage temperature is between 15 ... 25 °C with a humidity < 65 %rH.

Transport conditions

Specification item	Value	Unit	Condition
Ambient temperature	-40 … +60	°C	
Relative humidity	5 … 85	%rH	no dew, no water spray

MECHANICAL DIMENSIONS

Specification item		Value	Unit	Condition
Brite 3 FL200R nw Level 1 Brite 3 FL200R nw Level 1.5	diameter	113 ± 0.2	mm	
	height	1.4 ± 0.15	mm	
	weight	25 ± 1	gram	
Brite 3 FL200R nw Level 2	diameter	119 ± 0.2	mm	dimensions excluding cable
	height	2.1 ± 0.2	mm	excluding Molex Picoblade plug
	diameter screw opening	3.2	mm	for fixation with M3 screws
	distance screw opening	3.2	mm	for fixation with M3 screws
	weight	46.6 ± 1	gram	
Light emitting area	diameter	94 ± 0.3	mm	Brite 3 FL200R nw Level 1 Brite 3 FL200R nw Level 1.5 Brite 3 FL200R nw Level 2
	area	69.4	cm^2	

Diagrams of the Brite 3 FL200R nw Level 1

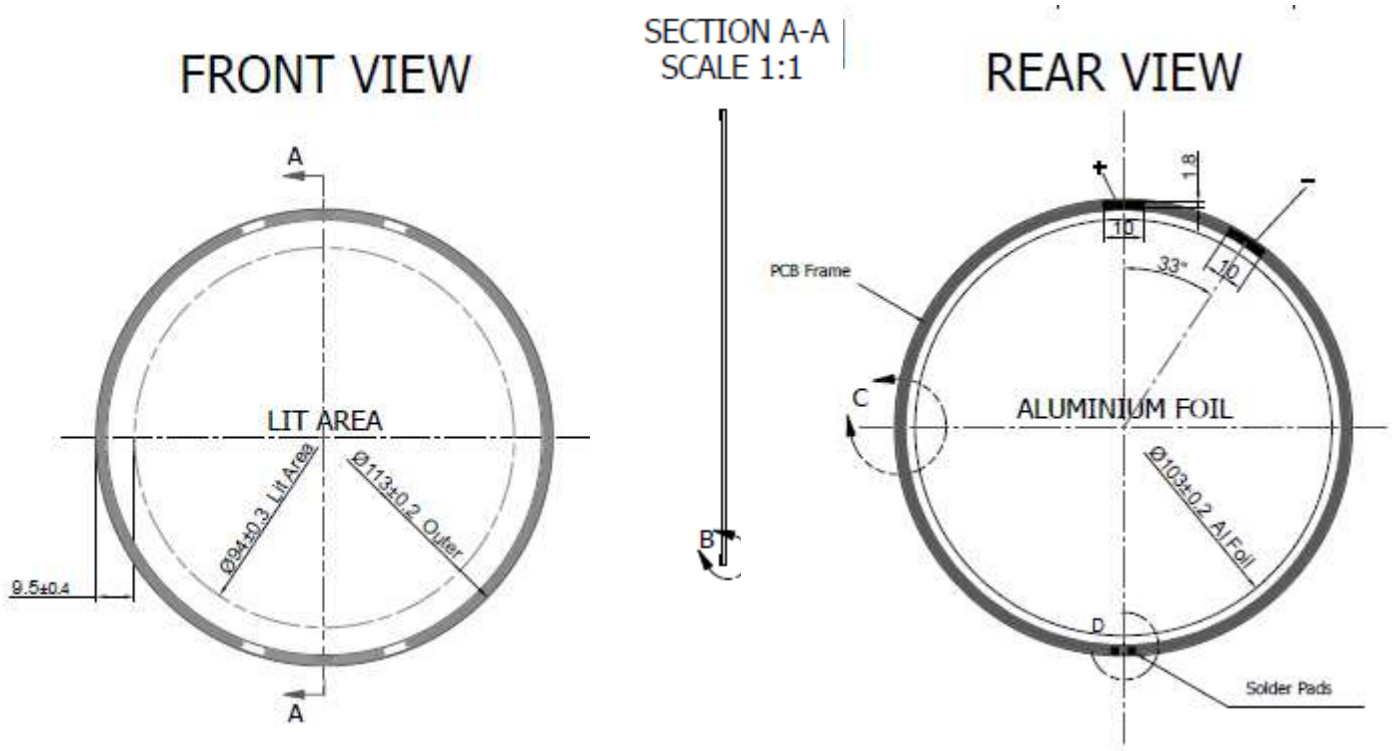

Figure 1: Brite 3 FL200R nw Level 1 – front and rear view

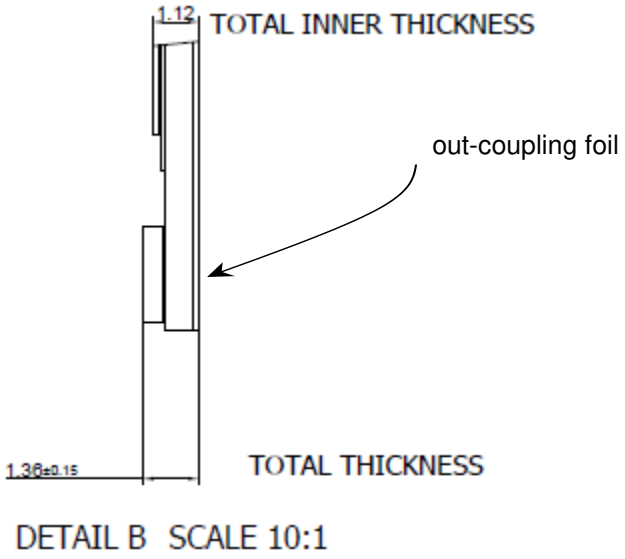

Figure 2: Detail B of Figure 1; Brite 3 FL200R nw Level 1

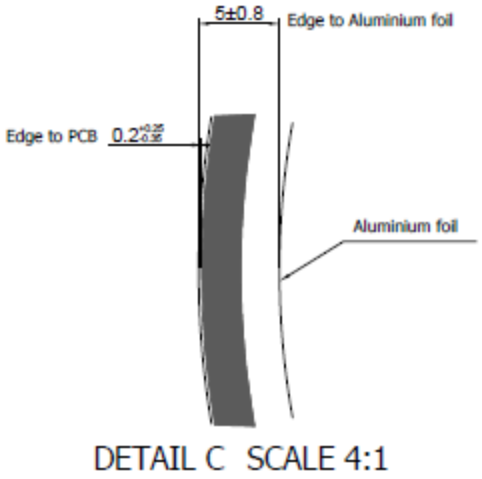

Figure 3: Detail C of Figure 1 – corner of PCB frame - integration level 1

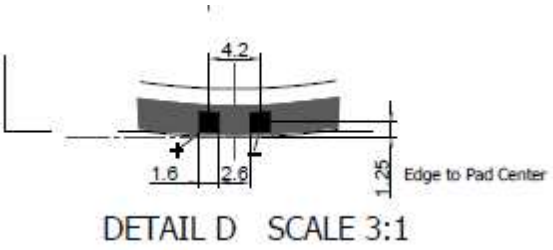

Figure 4: Detail D of Figure 1 – contact pads and distance to corner - integration level 1

Diagrams of the Brite 3 FL200R nw Level 1.5

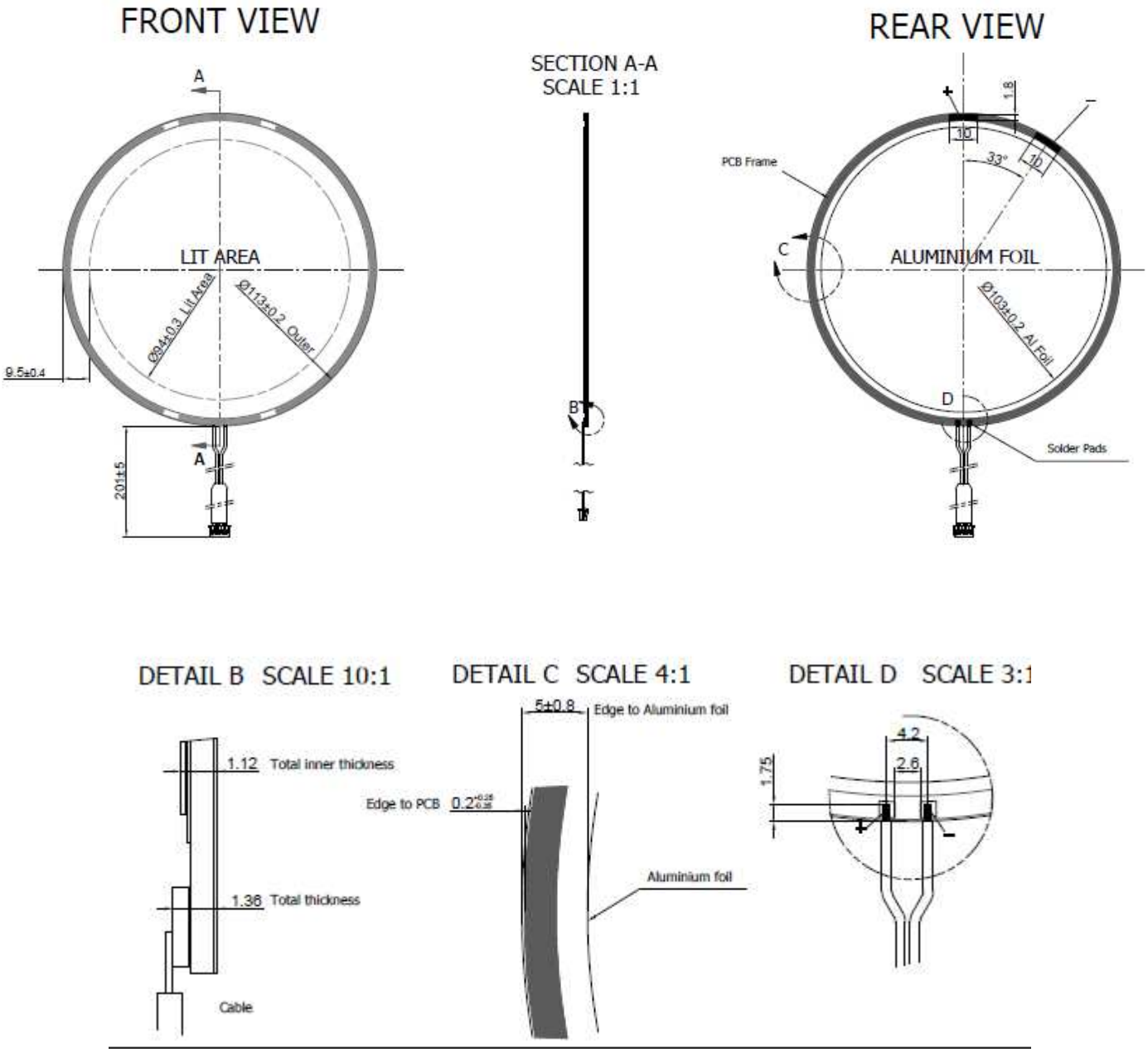

Figure 5: Brite 3 FL200R nw Level 1.5

Diagrams of the Brite 3 FL200R nw Level 2

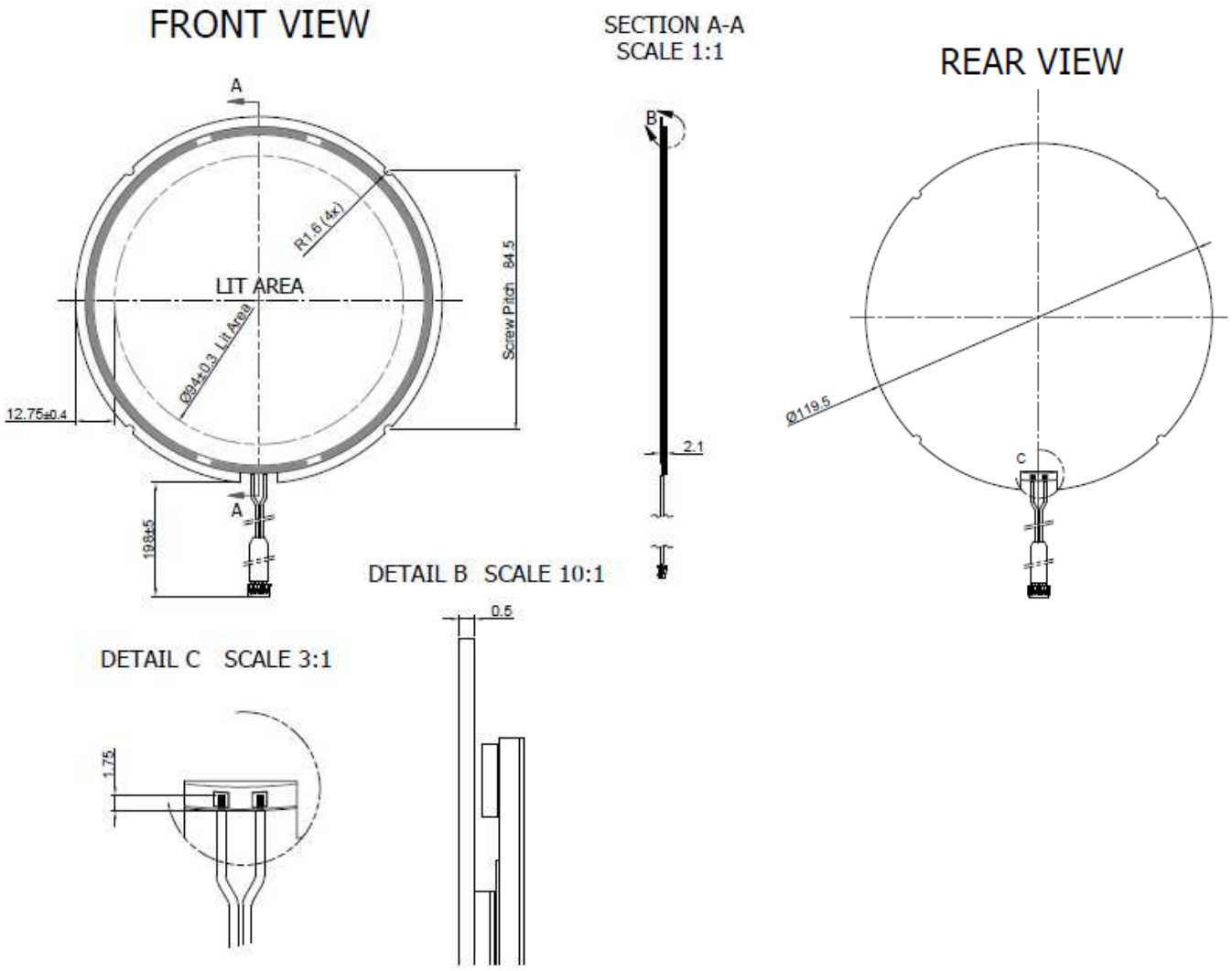

Figure 6: Brite 3 FL200R nw Level 2

Mechanical handling

OLEDs are electronic components and should not be tampered with in any way. They are made of thin glass with potentially sharp edges. Avoid mechanical stress, such as shock, pressure, bending, torsion and especially point loads on the OLED. To avoid fingerprints on the front side, preferably handle the OLED from the sides. Gloves or finger cots are recommended at all times whilst handling the OLED.

Avoid contact with water. Do not submerge OLEDs in any kind of solvent, acid, base, salt or other chemicals.

In case of damage to the product, disconnect the product from power supply without touching the damaged parts. Do not reconnect the product. Contact the manufacturer or a qualified service technician.

Improper use can cause OLEDs to break resulting in glass splinters. Please handle all OLEDs with care to avoid breakage as especially the edges of the OLED are very delicate. Use of protective gloves is advised, in particular with broken OLEDs or OLEDs with sharp edges/corners. Avoid direct contact with broken OLEDs.

The product may become warm during normal use. Do not cover with materials that are flammable.

ELECTRICAL AND OPTICAL CHARACTERISTICS - OLED

Electrical characteristics

Specification item	Value	Unit	Condition
OLED rated current, $I_{in\ rated}$	0.145	A	
OLED voltage at t=0, U_{in}	19.6 +/– 1.0	V DC	$I_{in\ rated}$
OLED voltage at end of life, $U_{EOL} = U_{in\ max}$	22	V DC	$I_{in\ rated}$
Power consumption at t=0, P_{in}	2.8	W	$I_{in\ rated}$
Power consumption at end of life, $P_{EOL} = P_{in\ max}$	3.2	W	$I_{in\ rated}$

All data nominal at stabilized conditions after 5 min warm-up, $T_{organic}$ = 35 °C.

OLED drivers

Use of power supplies with dedicated controls for turning off output power if an OLED fails is recommended when operating the OLED Panel Brite 3 FL200R nw. Examples of recommended drivers are shown in the table below. These drivers all have sockets compatible with the Molex Picoblade connector 510210500.

Product	Supply voltage	Output channels	Philips Product Code
Driver D230V 80W/0.1-0.5/1A/28V TD/A 8CH	120, 220-240, 277 V AC	8	9254.000.10200
Driver D024V 10W/0.1A-0.4A/28V D/A	24 V DC	1	9254.000.10100
Driver D024V 10W/0.1A-0.4A/28V DMX	24 V DC	1	9254.000.12000

Dimming

Both pulse width modulation (PWM) and amplitude modulation (AM) techniques can be used to dim the OLED. More detailed information can be found in the design-in guide for the Brite 3 FL300 family.

OLED connection

The OLED Panel Brite 3 FL200R is available at different integration levels. At integration level 1, no cable is attached to the device. Integration levels 1.5 and 2 provide a cable with a Molex Picoblade connector type compatible with the Lumiblade OLED drivers and resistors integrated in the cable which support the recognition of the correct panel settings by the drivers.

At integration level 1 the Brite 3 FL200R features contact areas on the rear side (see Figure 7). Area A and D provides contact pads A1 or D1 (plus) and A2 or D2 (minus). The individual signals for the 5-wire connector are shown in Figure 8. Only one of the interface areas need to be used for electrical contact.

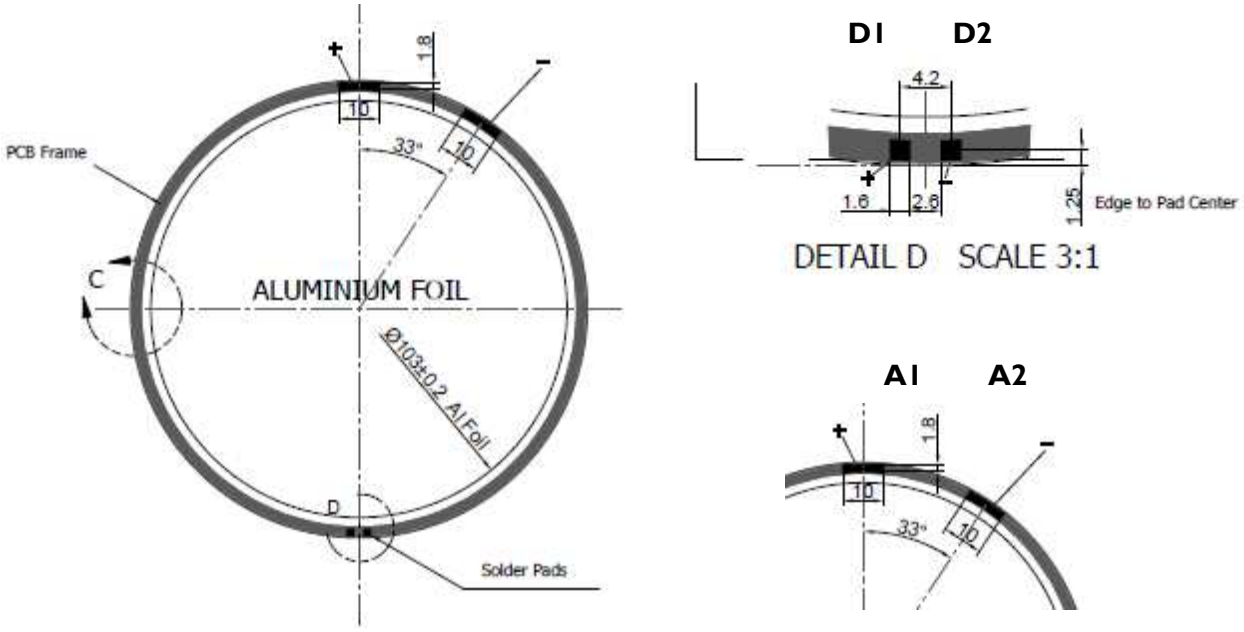

Figure 7: Contact pads of the Brite 3 FL300 nw Level 1

The function of the connector is illustrated in Figure 8. A1 and D1 link to the plus pole and A2 and D2 link to the minus pole. Using the Molex connector of the integration levels 1.5 and 2 according to the schematic in Figure 8 the dedicated OLED drivers automatically recognize the panel and drive it correctly.

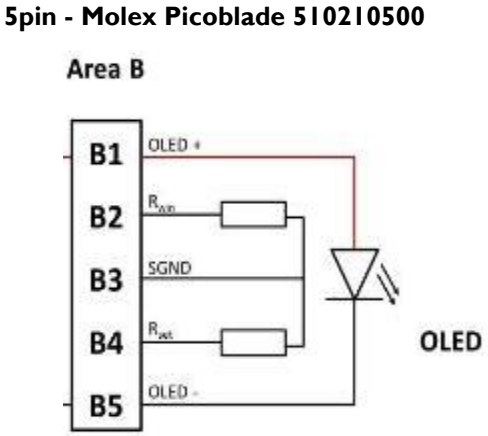

Figure 8: Channel connections from driver to the Brite 3 FL200R nw Level 1.5 and 2

Specification item	Value	Unit	Remark
Wire cross-section	26	AWG	flat cable; voltage rating: 300 V; circuits: 5
Wire length	198 ± 5	mm	
Connector (header/crimp)			Molex Picoblade male

OLED voltage

The voltage of the OLED depends on the point of operation, temperature of the organics and the age of the OLED. As a result, the OLED voltage is affected by the ambient temperature. During operation the temperature of the organics may increase, especially shortly after powering the OLED. At constant current control, this may result in a change in voltage.

Example of voltage evolution after a cold start at different ambient temperature levels is shown in Figure 9. The initial voltage drop is due to the device heating up until steady state (approx. 5 min after turning on). Besides this the voltage/organic temperature depends on the ambient temperature.

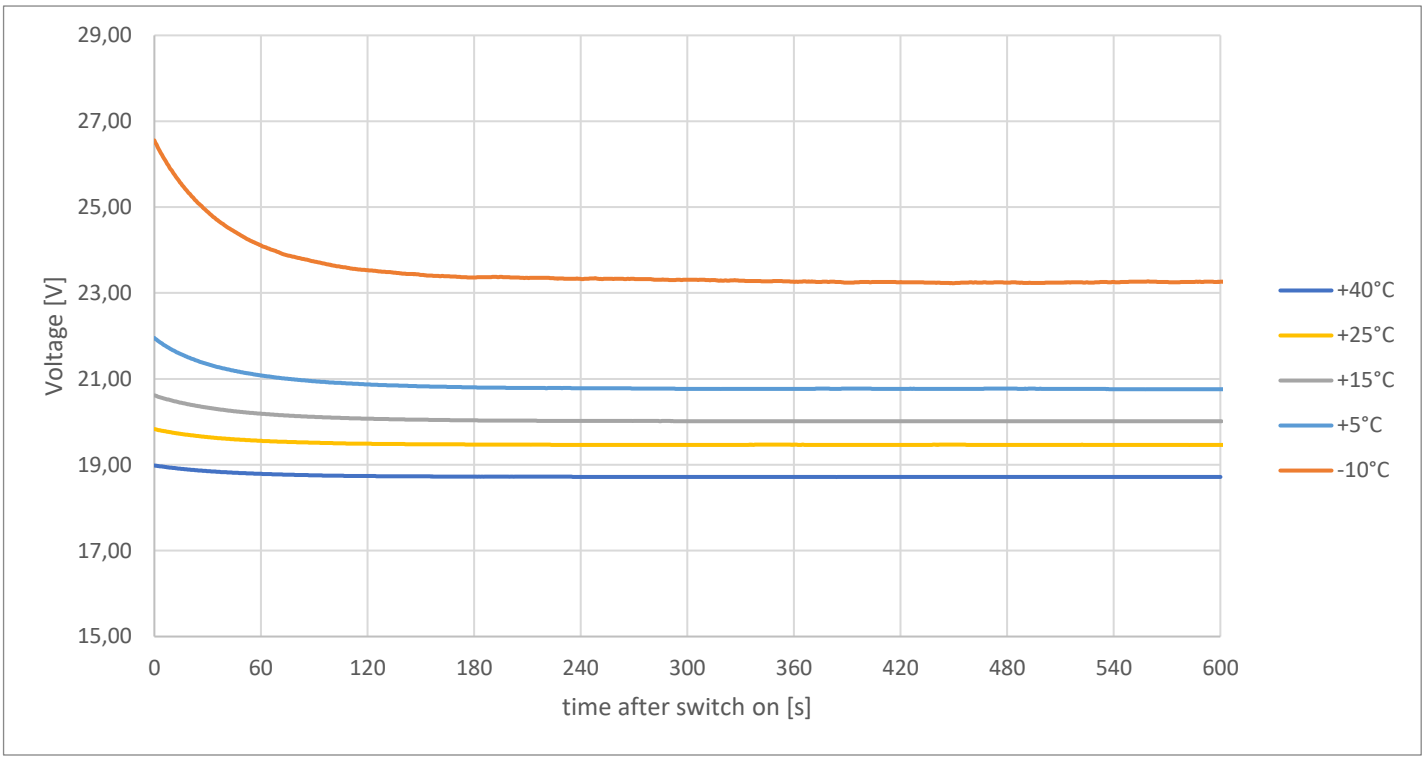

Figure 9: typical voltage evolution after start-up at different ambient temperatures, integration level 1, vertical orientation, air, $I_{in\ rated}$ = 0.145 A

Short circuit behavior

If an OLED fails it can fall into a short circuit. Such a condition may mean that

- no light is generated
- the OLED is heated locally, i.e. one small spot of the OLED surface gets hot
- the current still flows through the OLED but the voltage drops to a lower value.

In case such a fault occurs turning off the OLED is recommended.

No indication based on internal tests or market feedbacks that shorts appear for Brite 2 or Brite 3

Optical characteristics FL200R nw*[2]

Specification item	Value	Unit	Condition
Luminance, nominal	7000	cd/m²	@ $I_{in\ rated}$ = 0.145 A, perpendicular, center
	3000		@ 0.061 A, perpendicular, center
Luminous flux	165 ± 10 %	lm	@ $I_{in\ rated}$ = 0.145 A with L70B50 = 30khrs
	65 ± 10 %		@ 0.061 A with L70B50 = 100khrs
Luminous efficacy, nominal	57	lm/W	@ $I_{in\ rated}$ = 0.145 A
	61		@ 0.061 A
Color	White		
Chromaticity x, nominal	0.3792		integral measurement, CIE 1931
Chromaticity y, nominal	0.3717		
Chromaticity u', nominal	0.2263		integral measurement, CIE 1976
Chromaticity v', nominal	0.4991		
Duv	-0.0020		center of color box with respect to BBL
Color spec limits CIE xy	0.3704 0.3702 0.3904 0.3832 0.3879 0.3732 0.3679 0.3602		corner coordinates of area in colorspace
Color spec limits CIE u'v'	0.2211 0.4972 0.2291 0.5059 0.2315 0.5011 0.2234 0.4922		corner coordinates of area in colorspace
CCT	4000	K	@ $I_{in\ rated}$ = 0.145 A
Color Rendering Index: CRI / R9	>90 / >75		@ $I_{in\ rated}$ = 0.145 A
TM-30 metrics: R_f / R_g	85/ 97		@ $I_{in\ rated}$ = 0.145 A
Surface uniformity chromaticity	0.0020		Referring to IEC 62922
Angular chromaticity uniformity	0.0050		Referring to IEC 62922
Homogeneity	≥ 90%		9 point measurement, min/max, $I_{in\ rated}$ = 0.145 A

*[2] all data for stabilized electrical conditions of the device after 5 min warm-up period, integration level 1.

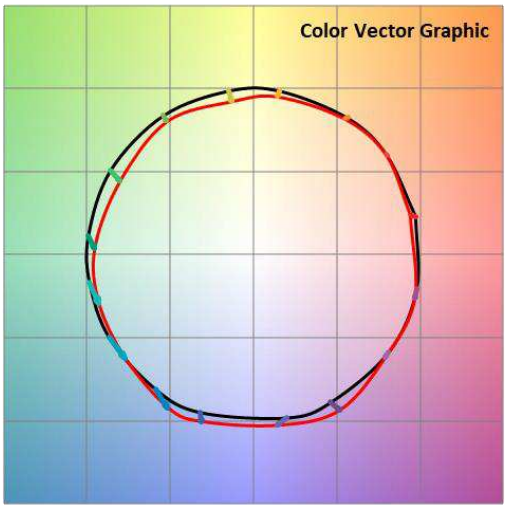

Figure 10: Color vector graphic based on TM-30 metrics for Brite 3 FL200R nw

OLED spectrum

Typical spectra of the OLED at different driving currents are given in Figure 11.

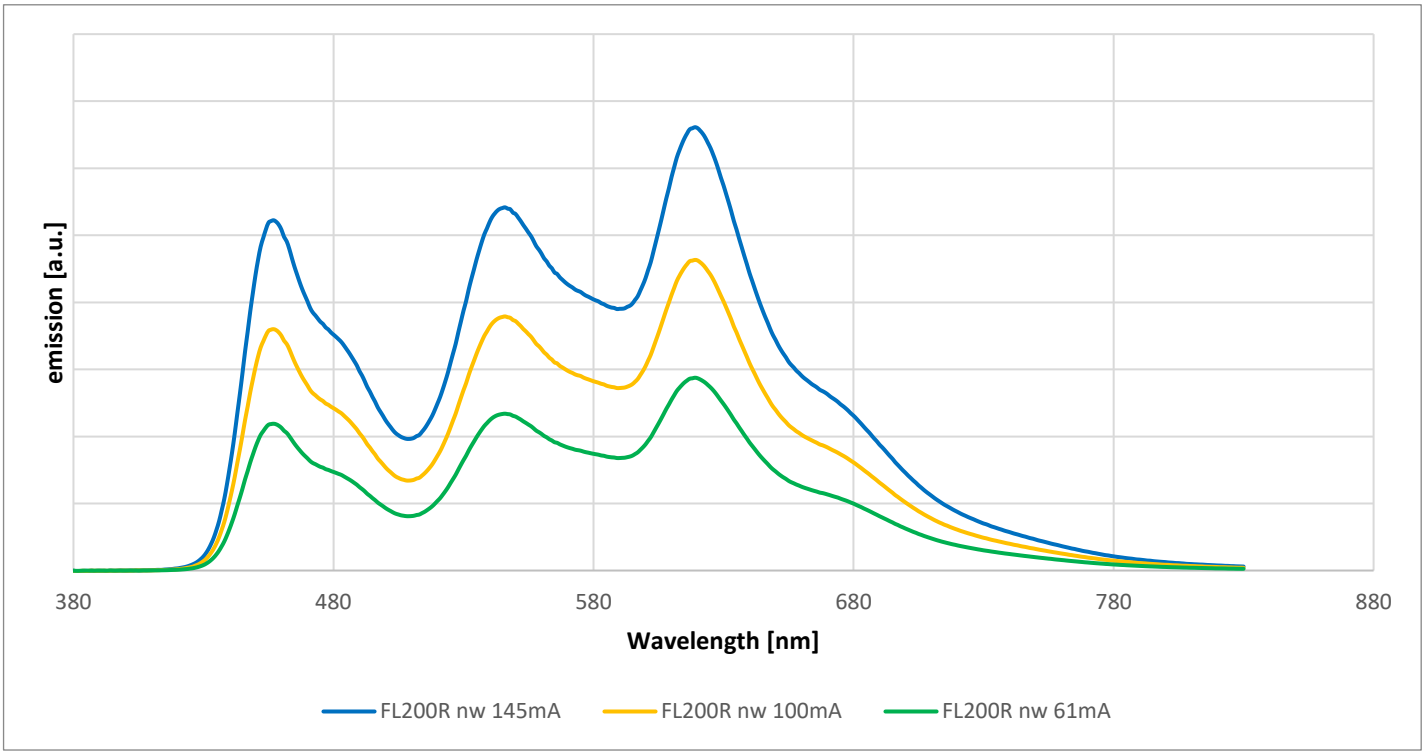

Figure 11: typical emission spectra of the Brite 3 FL200R nw at different driving currents (I = 0.061 A, 0.100 A, 0.145 A)

Current – voltage – luminance characteristics

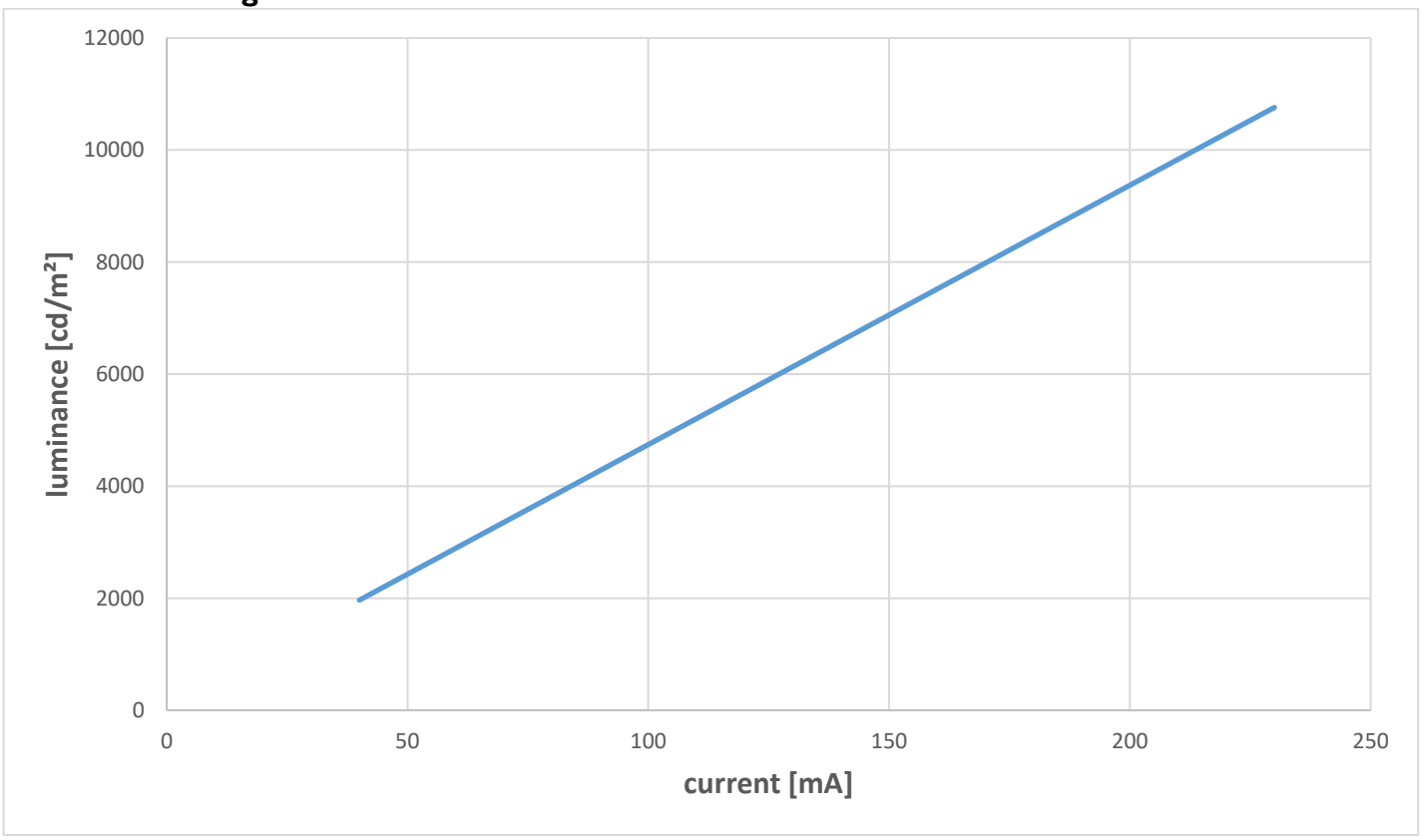

Figure 12: Luminance versus forward current at room temperature, integration level 1

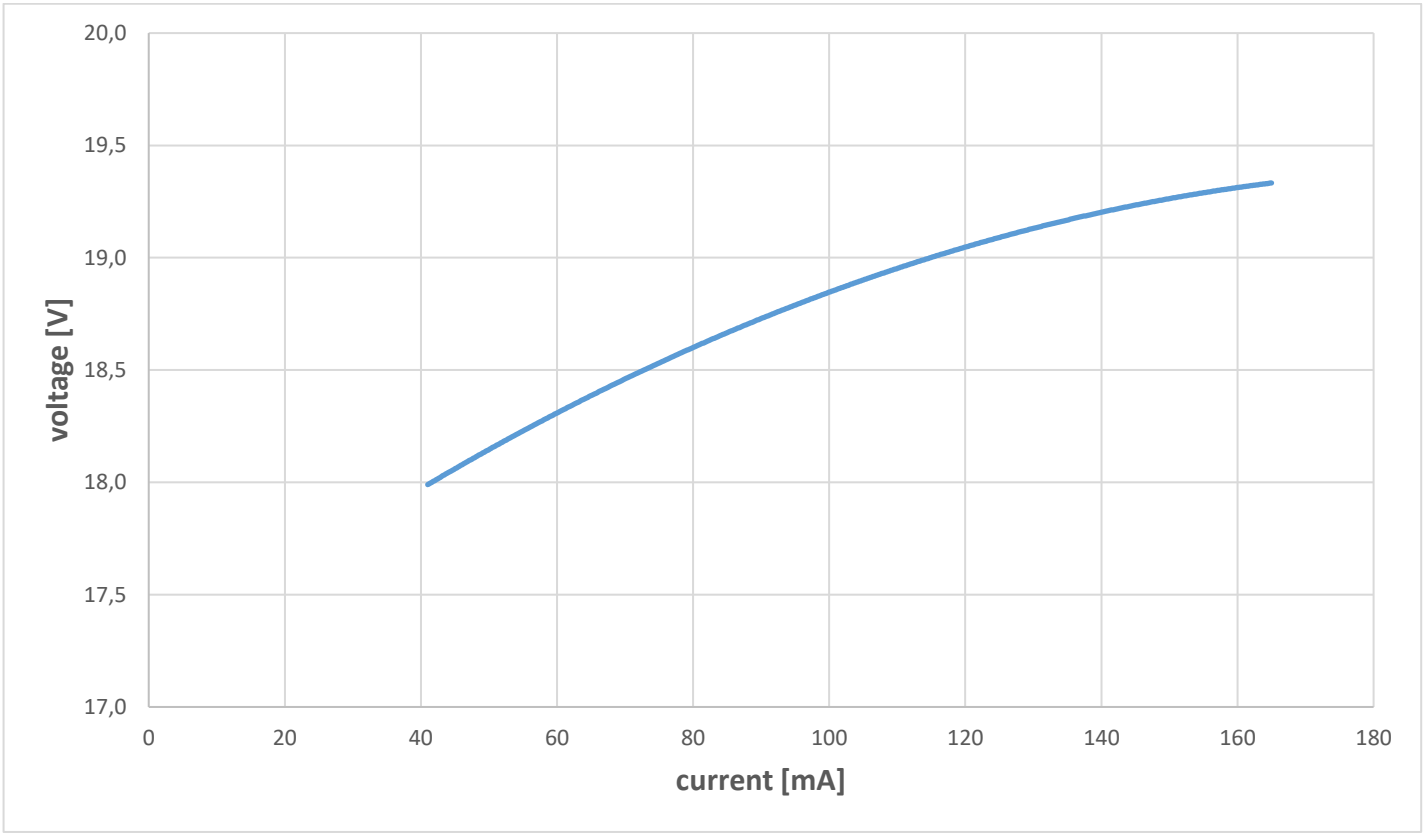

Figure 13: Voltage versus forward current at room temperature, integration level 1

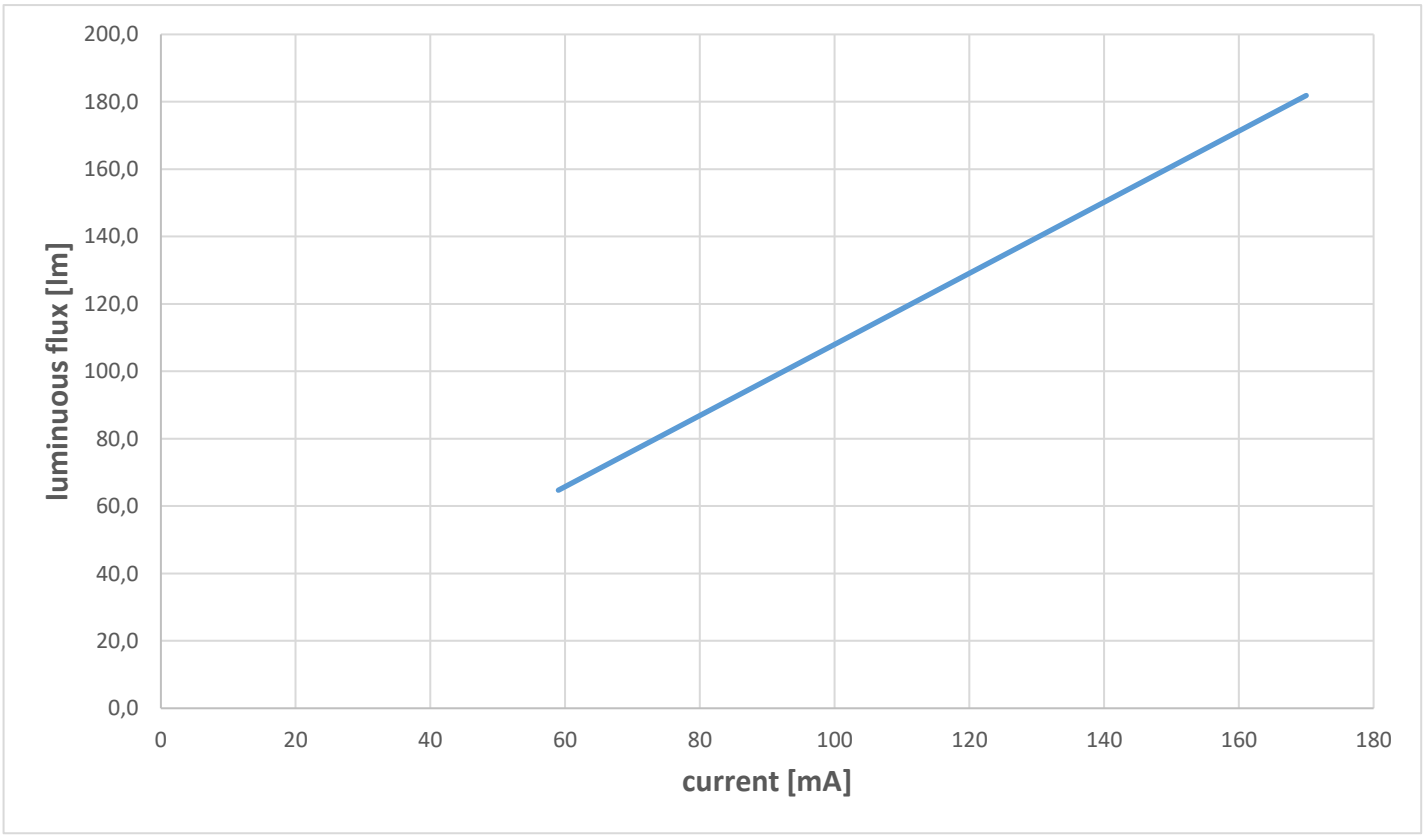

Figure 14: Luminous flux vs current, integration level 1

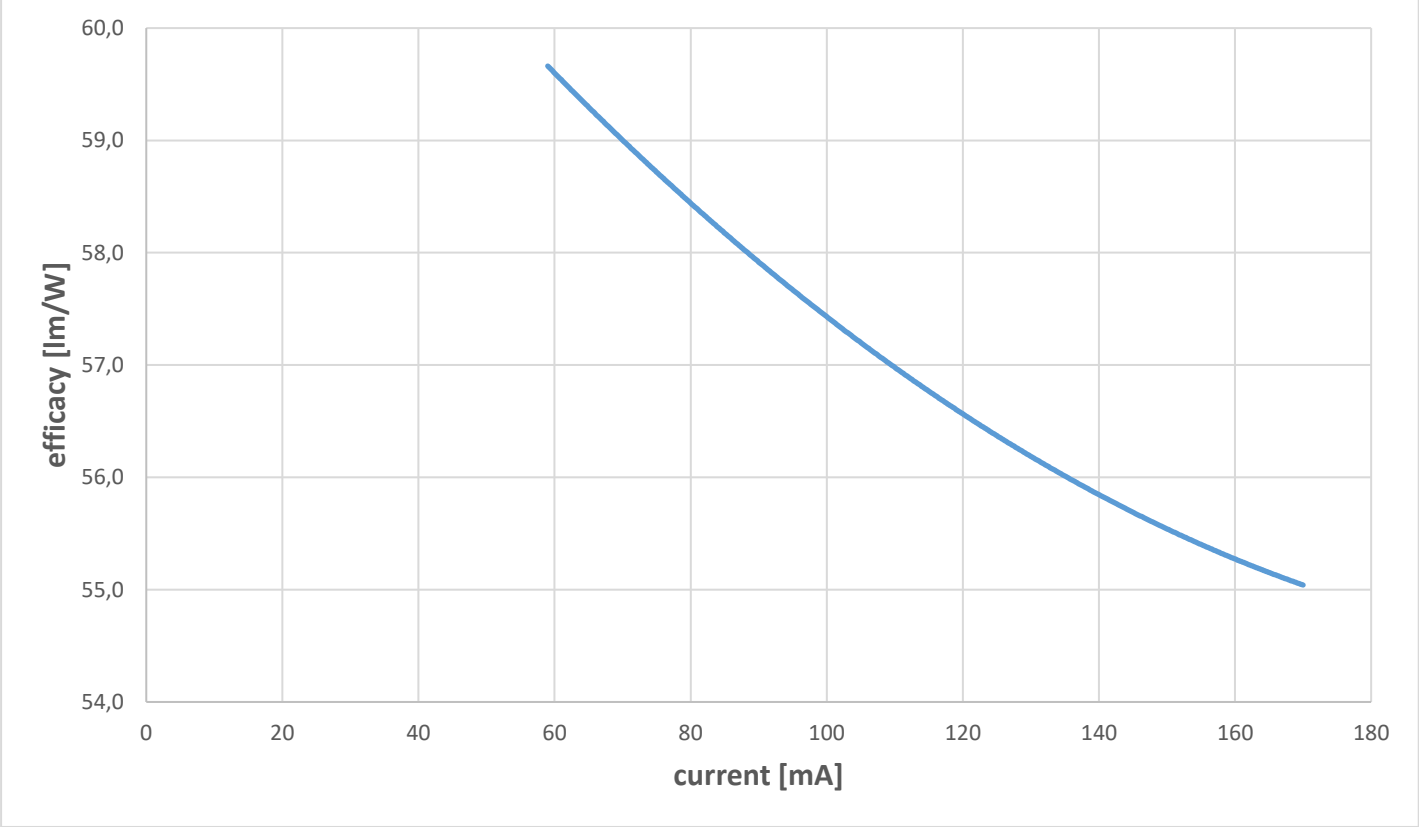

Figure 15: Efficacy versus current at room temperature, integration level 1

Homogeneity of optical parameters

The OLED Panel Brite 3 FL200R is a large area device and the luminance value may depend on the location within the active area. A very small color point distribution may also be observed.

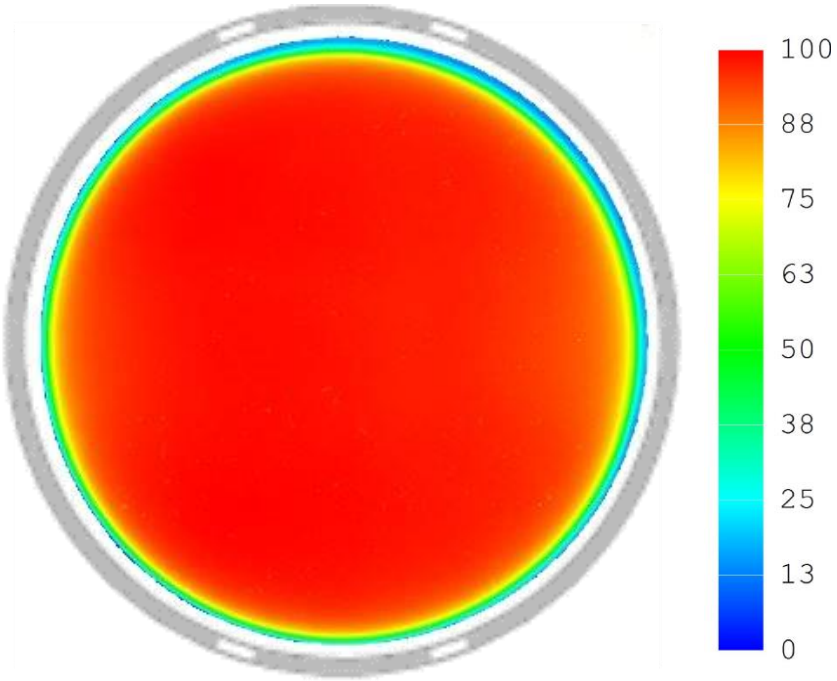

Figure 16: Typical luminance distribution for a Brite 3 FL200R nw Level 1. Operation conditions: vertical in air, RT (= 25 °C), I = $I_{in\ rated}$

Angular dependency

The luminance (measured in cd/m²) of the OLED light depends on angle of observation. Figure 17 shows typical values for the OLED Panel Brite 3 FL200R nw Level 1 operated at different driving currents.

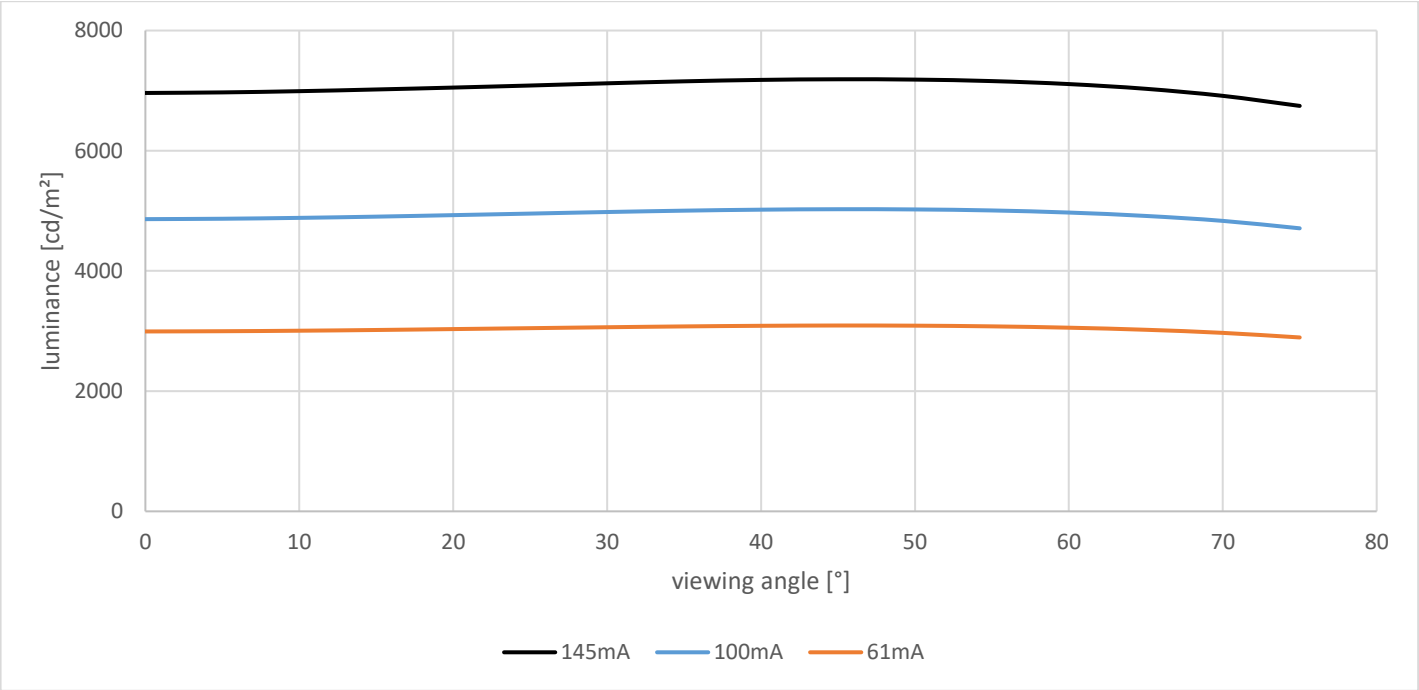

Figure 17: Luminance as function of the viewing angle. Driving currents I= 0.061 A, 0.100 A, 0.145 A

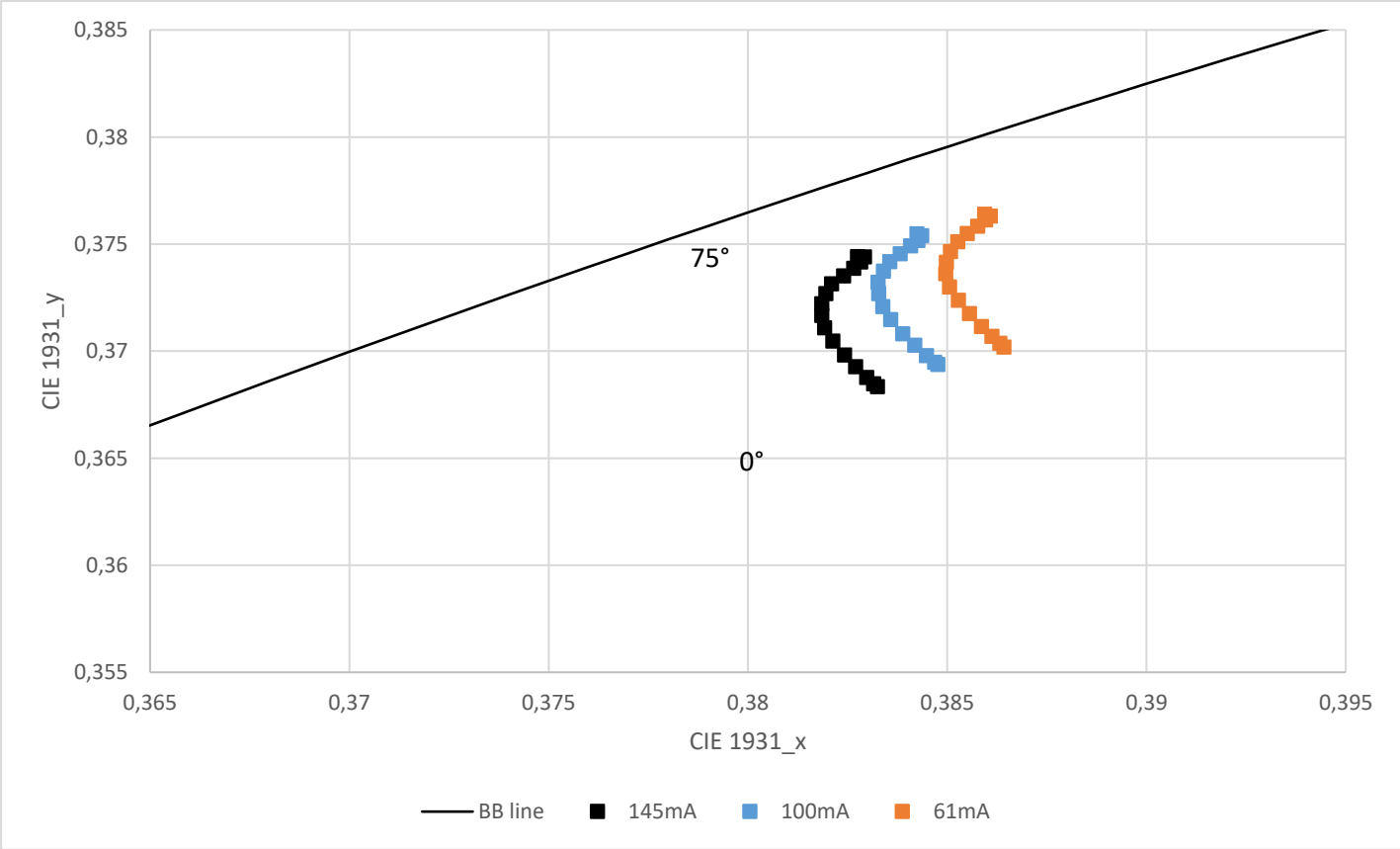

Figure 18: CIE x/y as function of the viewing angle. Driving currents I= 0.061 A, 0.100 A, 0.145 A, integration level 1

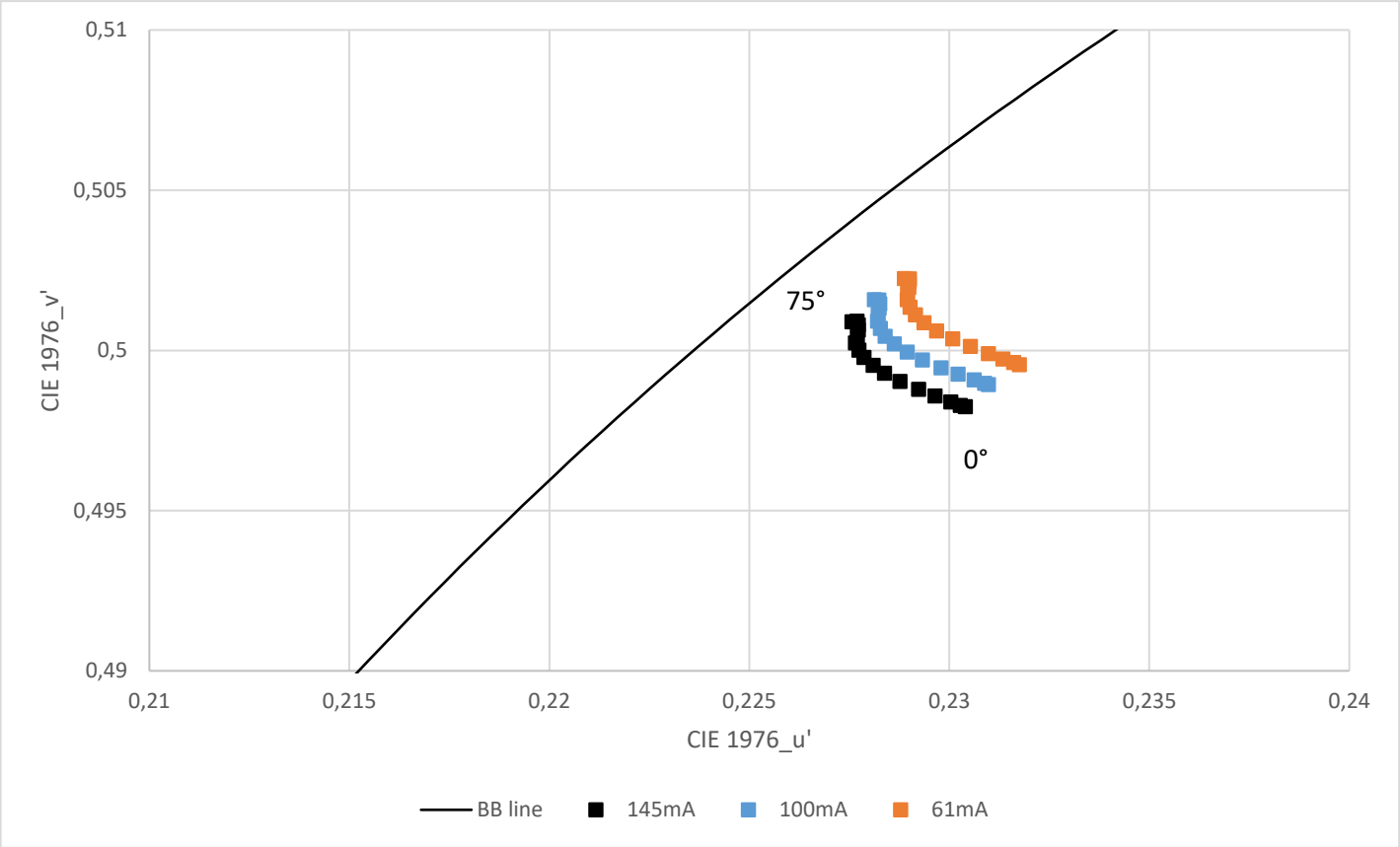

Figure 19: CIE u'/v' as function of the viewing angle. Driving currents I= 0.061 A, 0.100 A, 0.145 A, integration level 1

THERMAL CHARACTERISTICS

OLEDs can generate a certain amount of heat. Despite the fact that no active cooling is required, the panels should not be covered in order to avoid heat accumulation.

The OLED temperature during operation depends on ambient conditions and driving current. Indicative values for internal (organics) temperature of the device can be measured at the glass surface at the center of the device with a thermocouple attached.

Typical temperature for the Brite 3 FL200R nw Level 1 is 35 °C with the following set-up:

- $I = I_{in\ rated} = 0.145$ A
- $T_{ambient}$ = RT = 25 °C
- vertical orientation
- climate chamber, no active convection.

Lifetime

Luminous flux reduces with lifetime of the OLED. The luminous flux of the Brite 3 FL200R decreases to approximately 70% after 30,000 hours at rated current.

Brite 3 FL200R nw

Specification item	Value	Luminous flux	Condition
OLED Panel Lifetime L70B50	30,000 hours	165lm	@ $I_{in\ rated}$ = 0.145 A, $T_{organic}$ = 35 °C
OLED Panel Lifetime L70B50	100,000 hours	65lm	@ 0.061 A, $T_{organic}$ = 30 °C

Voltage increases over lifetime of the OLED; color and homogeneity of the panel may also change.

Storage lifetime
Under the recommended storage conditions the shelf life of the OLED is 2 years

General handling recommendations and care

Cleaning
Please avoid scratching the front side with any hard or sharp objects. OLEDs can be cleaned with any soft textile. If required use a damp cloth but avoid extensive moisture.

Use of a compressed air spray to remove regular dust from the individual panels is advised for everyday cleaning. Should fingerprints or more persistent contamination occur, isopropanol applied to a lint-free cloth can be used to gently clean the surface of the OLED. Clean using circular movements beginning at the center of the OLED and moving outwards towards the edges. Contact with water is to be avoided.

Storage and operating
Please note that the recommended storage temperature is 15 °C to 25 °C. The recommended relative storage humidity is 65% or lower. Avoid exposing OLEDs to UV light.

Safety
Please be careful when handling OLEDs. The edges of the OLED panels may be sharp and can chip or break.

In the unlikely event that an OLED fails, the temperature may rise locally to high levels. To avoid this the OLED should be turned off immediately.

Disposal
OLEDs should be disposed of according to local legislation

Logistical data

Specification item	Value
Product name	OLED Panel Brite 3 FL200R nw Level 1
Order code	LPB3200SC1NWL101
Pieces per box	20

Specification item	Value
Product name	OLED Panel Brite 3 FL200R nw Level 1.5
Order code	LPB3200SC1NWL105
Pieces per box	20

Specification item	Value
Product name	OLED Panel Brite 3 FL200R nw Level 2
Order code	LPB3200C1NWL201
Pieces per box	20

Contact:

OLEDWorks LLC
1645 Lyell Avenue, Suite 140
Rochester, NY 14606, USA

OLEDWorks GmbH
Philipsstr. 8, 52068 Aachen, Germany

OWinfo@oledworks.com

For more information visit:
www.oledworks.com
www.facebook.com/oledworks
www.twitter.com/oledworks
www.instagram.com/oledworksllc

© 2018 OLEDWorks LLC
All rights reserved. Correct as of July 2018.